Jerrold

TUCKER

ELECTRONICS COMPANY

— INSTRUCTION MANUAL

MODEL NO: LA-5100

FUNCTION: RF PRE

MANUFACTURED BY

INSTRUCTION MANUAL

1P-PM-007 435-364.1

JERROLD

RF PRECISION LOG AMPLIFIER

MODEL LA-5100

ALL DATA SUBJECT TO CHANGE WITHOUT NOTICE

TABLE OF CONTENTS

	Pages
SECTION I INTRODUCTION	1- 4
1-1 Scope	1
1-2 Description	1- 2
1-3 Specifications	2- 4
Photographs	5- 6
SECTION II OPERATION	7-13
2-1 General	7
2-2 Voltage Source	7
2-3 Controls Chart	7-11
2-4 Preparation for Operation	11
2-5 Calibration Check	11-12
2-6 Check Gain	12
2-7 Check Expand Switch Operation	12
2-8 Connecting Device to be Tested	13
2-9 Reading Insertion Loss Directly	13
SECTION III CIRCUIT DESCRIPTION	14-15
3-1 General	14
3-2 Circuit Description	14-15
SECTION IV MAINTENANCE	16-28
4-1 Scope	16
4-2 General	16
4-3 RF Alignment Procedure	16-18
4-4 Meter Zero Adjustment	19
4-5 Meter Calibration	19-20
4-6 Control Adjustments	20-21
Replacement Parts List	22-26
Schematics	27-28

SECTION I

INTRODUCTION

1-1 Scope

This publication contains operational and service instructions together with an electronic parts list and schematics for the Jerrold Precision RF Logarithmic Amplifier Model LA-5100.

1-2 Description

The Jerrold Precision RF Logarithmic Amplifier Model LA-5100 is used in making measurements over the 500 kc to 100 mc range of the response of networks, filters and amplifiers, etc., which exhibit dynamic operating ranges down to 85 db. The unit comprises a nine-stage band-pass amplifier, a dc automatic gain control amplifier, a detector with low impedance output for scope or X-Y recorder, an output meter, and a regulated power supply.

The amplifier develops the required gain in a precise logarithmic manner to permit the total response characteristic of the deviec under test to be linearly displayed on a standard dc oscilloscope.

There are four calibrated sensitivity or display ranges under selector switch control from the front panel; the linear range, which is equivalent to a 20 db calibrated range; a 0 to 40 db range; a 0 to 60 db range; and a 0 to 80 db range. In the linear mode of operation, the linear gain control is adjusted for full output on the scope and is representative of a 0 to 20 db display. Further adjustment of the linear control permits uncalibrated linear viewing of the response characteristic down to 80 db.

The 40, 60, and 80 db ranges are internally calibrated and require no adjustments for viewing except that the input requirement to the amplifier of 0.5 v rms must be maintained for accurate display results. Associated with the three calibrated ranges are the log-expand function controls, which permit the uncompressed or linear viewing of the first 5 to 8 db of each range. This function is initiated by the expand switch, which simultaneously reduces the output voltage by 40% and energizes the expand circuits. The expand level control is then trimmed for full output on the scope.

The 4-1/2 inch meter provided on the front panel is calibrated in four ranges, 0 to 20 db; 0 to 40 db; 0 to 60 db and 0 to 80 db; and is used for point-by-point response measurements and for calibration purposes.

Tube and component aging and line voltage variation effects have been minimized by a regulated power supply, rf and dc degeneration in all rf amplifier stages, and by compensating circuits and degeneration in the dc amplifier section.

Normal factory alignment and calibration uses an input level of 0.5 v rms as standard procedure. In order to insure a true logarithmic display, this input level must be maintained to ±2%. With this input level it is possible to observe calibrated displays down to 80 db or 0.1 v output.

The input circuitry and calibration adjustments have been designed to allow for recalibration of the instrument with an input level which is ± 3db (.353 to .647 v rms) from the normal .5 v rms required.

1-3 Specifications

The specifications for Model LA-5100 are listed in table I.

TABLE I

SPECIFICATIONS

Frequency Range	500kc to 100mc
Flatness of Response	±1 db
Dynamic Range	-85 db with 0.5 v rms input
Measurements Display	1. Direct-reading meter calibrated in db and volts for point-by-point measurements. 2. Equipped with output jacks for connection to oscilloscope or X-Y recorder.
Metering Ranges	1. 0-20 db variable range for linear presentation. 2. 0-40 db, 0-60 db, and 0-80 db ranges for full-scale logarithmic presentation.
Log Expand Control	Permits expansion of at least the first 5 db of the logarithmic presentations for detailed analysis of pass band.
Log Presentation Accuracy	Better than ±1.5 db except that from 70 to 80 db on the 0-80 db range the accuracy is ±2 db.*
Video Response	Approximately 6.0 microseconds.

* Note: A line voltage change of ±10% will produce an additional ± 1db in log presentation accuracy.

Noise Level	The equivalent input noise is at least 88 db below 1 volt.
Input Impedance	50 ohms bridging
VSWR	Better than 1.2:1 when terminated.
Power Requirements	150 watts at 115/230 volts, 50/60 cycles ac.
Dimensions	7" x 14½" x 19" for standard rack mounting.

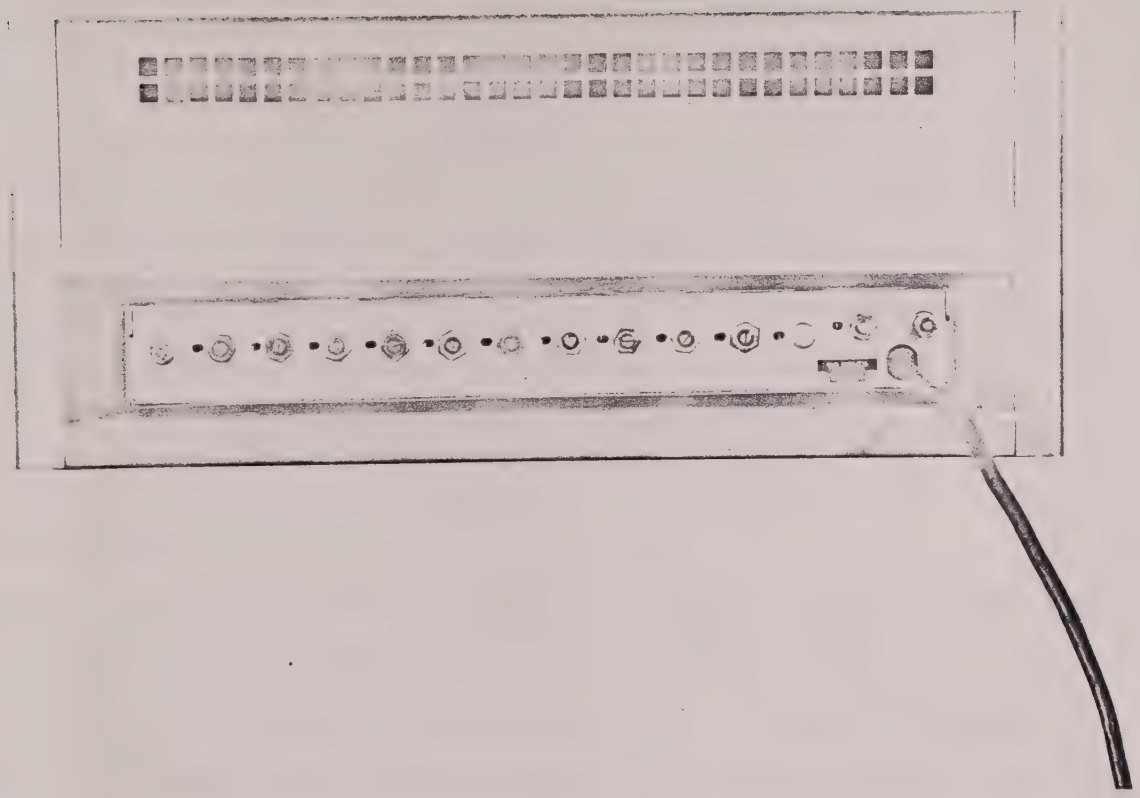

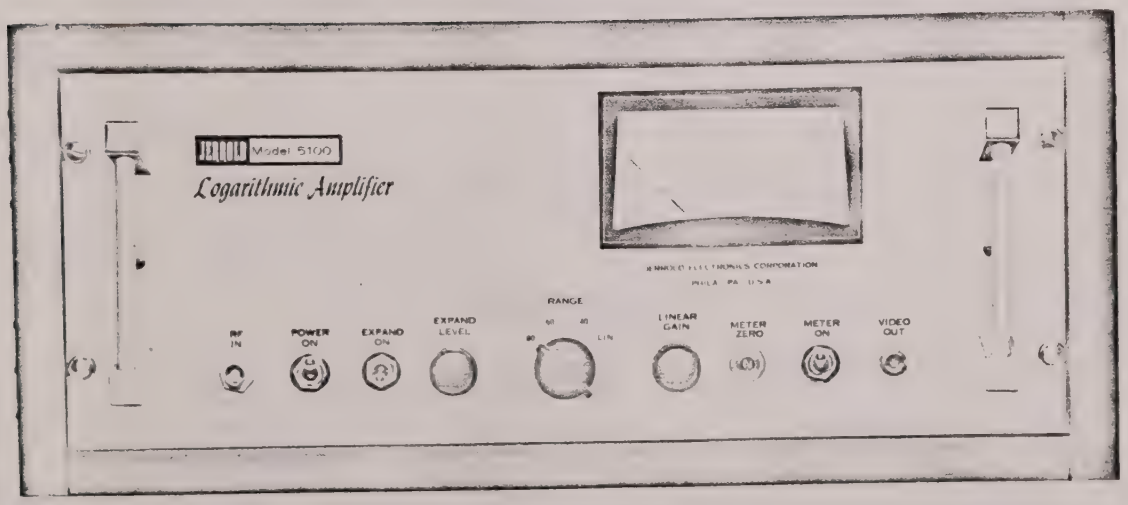

Model 5100

#1472

SECTION II

OPERATION

2-1 General

Model LA-5100 is completely calibrated, thoroughly checked out, and packed with great care to insure that the delivered instrument will be in perfect operating condition. The procedures outlined in this section will familiarize the user with the instrument and reveal any damage incurred in transit.

2-2 Voltage Source

Model LA-5100 as shipped from the factory is set up for 115 volt 50/60 cycle operation. If equipment is to be operated from a 230 volt source, the unit should be removed from the cabinet and the bottom cover removed to expose terminal board. Remove jumpers from between terminals 1 and 2, and 3 and 4. Connect terminals 2 and 3 with a jumper. Replace cover and remove the self-tapping screws holding the identification plate to chassis. When this plate is turned over it will read "230 v 50/60 cycle". Replace plate.

2-3 Controls Chart

This chart is provided to familiarize the user with all controls and connections on Model LA-5100.

CONTROLS CHART

Front Panel

Name	Schematic Designation	Type	Function
RF IN	J1	BNC Connector	Part of a bridging input with J2 located on

Name	Schematic Designation	Type	Function
			back of instrument. Either jack may be used separately if the other is terminated with the TR-50 supplied.
POWER ON	S3	2position toggle switch POWER ON (down)	Energizes LA-5100 from power source. De-energizes instrument.
EXPAND ON	S4	2 position toggle switch EXPAND ON (down)	Provides expansion of first 5 db of range or more. De-energizes circuit.
EXPAND LEVEL	R86	Potentiometer	
		Full CW	Maximum expansion
		Full CCW	Minimum expansion
RANGE	S1	4-position switch	
		LIN	Linear range (0-20 db)
		40	Logarithmic range(0-40db)
		60	Logarithmic range(0-60db)
		80	Logarithmic range(0-80db)
LINEAR GAIN	R95	Potentiometer	
		CW	Maximum gain
		CCW	Minimum gain

Name	Schematic Designation	Type	Function
METER ZERO	R69	Potentiometer (screwdriver adjustment)	Zeros meter electronically.
METER ON	S2	2 position toggle switch	Energizes meter circuit
		METER ON (down)	De-energizes meter circuit
VIDEO OUT	J3	BNC connector	Front panel video output connection. If back panel video output connection (J4) is used, terminate J3 with 10 k terminating resistor from J4.
		Back - Top Chassis	
FUSE	F1	Slo blo 2 amp	Power line protection
		Jones socket	Power to auxiliary equipment.
		Back Skirt of Chassis	
RF IN	J2	BNC connector	Refer to J1 on front panel
VIDEO OUT	J4	BNC connector	Refer to J3 on front panel
80/80	R88	Potentiometer (screwdriver adjustment)	

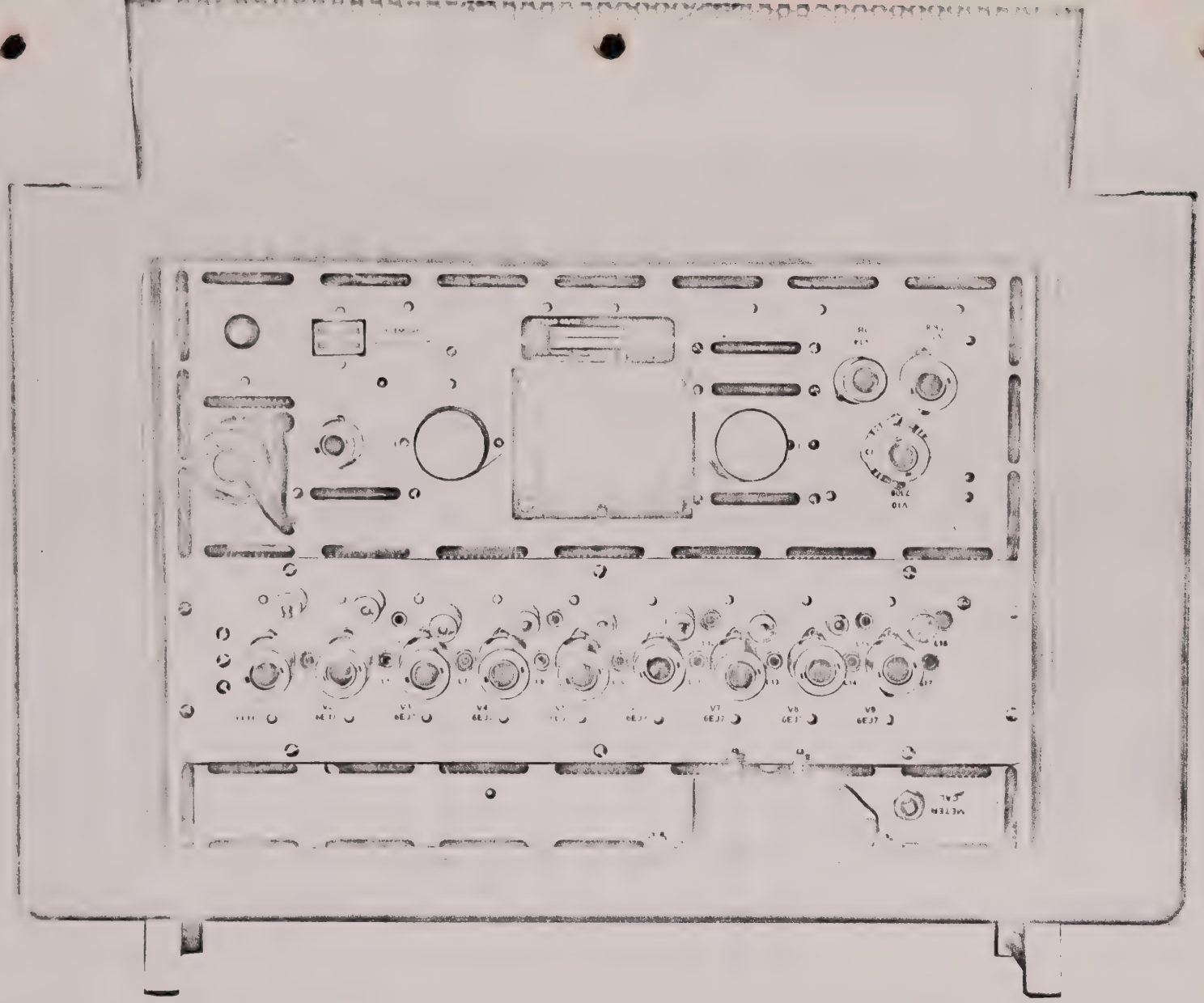

Model 5100

#1471

Name	Schematic Designation	Type	Function
$\frac{40}{80}$	R101	Potentiometer (screwdriver adjustment)	
$\frac{20}{80}$	R105	"	" "
$\frac{0}{80}$	R108	"	" "
$\frac{60}{60}$	R90	"	" "
$\frac{40}{60}$	R99	"	These potentiometers are used to set the limits of the various ranges. They have been carefully adjusted at the factory. Do Not attempt to adjust until full instructions are available.
$\frac{20}{60}$	R104	"	
$\frac{0}{60}$	R107	"	
$\frac{40}{40}$	R91	"	
$\frac{20}{40}$	R97	"	
$\frac{0}{40}$	R106	"	
		Inside Chassis	
METER CALIBRATE	R75	Potentiometer (screwdriver adjustment)	Meter calibration
L4	L4	Slug-tuned coils	
L5	L5	"	These coils are in the plate circuits of the various tubes in the RF
L6	L6	"	
L7	L7	"	

Name	Schematic Designation	Type	Function
L8	L8	Slug-tuned coils	amplifier. They have
L9	L9	"	been carefully tuned at
L10	L10	"	the factory. Do Not at-
L11	L11	"	tempt to adjust until
L12	L12	"	full instructions are
L13	L13	"	available.
L14	L14	"	
L15	L15	"	
L16	L16	"	
L17	L17	"	

2-4 Preparation for Operation

1. Plug LA-5100 into proper power source and allow instrument to warm up for at least 30 minutes.
2. Place METER ON switch in the OFF position and check mechanical zero of meter. Adjust if necessary.
3. Place RANGE switch in LIN position, LIN GAIN control full CCW, and METER ON switch to METER ON position.
4. Adjust METER ZERO control to make meter read infinity (extreme left of scale). The instrument is now ready for operation.

2-5 Calibration Check

NOTE: EXPAND switch must be OFF to obtain calibrated output.

1. Apply signal within range of instrument (500 kc to 100 mc) at 1/2 volt RMS level.

NOTE: Model LA-5100 has been calibrated with a 10 mc signal at the factory. There will be slight variations at other frequencies.

2. Place RANGE switch at 40, 60, and 80 positions in turn. Meter should read 0 db at each position.

3. Reduce input 20 db (20 db pad). Meter should now read 20 db at each of the range positions (40, 60, and 80).

4. Reduce input 40 db and check 40, 60, and 80 positions of RANGE switch. Meter should read 40 db.

5. Reduce input 60 db and check 60 and 80 positions of RANGE switch. Meter should read 60 db.

6. Reduce input 80 db and check 80 position of RANGE switch. Meter should read 80 db.

2-6 Check Gain

1. Remove pad from input and replace with a variable attenuator.

2. Turn LINEAR GAIN control fullCW and adjust input signal level to obtain an 0 db meter reading. The measured input should now be no higher than 77db below 1 volt.

3. Check video output to see that it measures 1 volt dc when meter reads 0 db.

4. Turn LINEAR GAIN control full CCW. The meter should now read infinity.

2-7 Check Expand Switch Operation (40, 60, or 80 db ranges)

1. Apply signal at 1/2 volt RMS level.

2. Place EXPAND switch in ON position, and turn EXPAND LEVEL control full CCW. Meter should drop to approximately mid-scale.

3. Turn EXPAND LEVEL CW. Meter needle should go to 0 db and beyond.

2-8 Connecting a Device to be Tested

1. Connect the device under test between the RF signal source and the INPUT jack on Model LA-5100. Connect VIDEO OUT jack on LA-5100 to vertical input of scope and the horizontal output of the sweep generator to the horizontal input of the scope.

   NOTE: It is recommended that the meter on LA-5100 be turned OFF when sweeping at slow rates to avoid excessive motion of the needle.

2-9 Reading Insertion Loss of Device Under Test Directly

1. The insertion loss of a device under test may be read directly on the meter or scope if a signal measuring 1/2 volt RMS is fed to the device under test.

SECTION III

CIRCUIT DESCRIPTION

3-1 General

3-1.1. Any amplifier whose input-output curve follows the relationship $E_0 = k_1 \log_{10} E_i + C$ is a logarithmic amplifier. When the input level of such an amplifier is varied logarithmically, the output may be conveniently displayed as a linear function.

3-1.2. The basic logarithmic function of the LA-5100 is developed by using the transfer characteristics of the cascaded rf amplifier tubes as controlled by a dc grid bias feedback system. The particular type tubes used permit the desired logarithmic relationship between input and output to be maintained with high degree of accuracy.

3-2 Circuit Description

3-2.1 The LA-5100 comprises five states of wide-band rf amplification, a diode detector doubler, and a two-stage dc amplifier. The rf amplifier uses four tube pairs, each pair incorporating series-shunt and series peaking, with cathode degeneration, both ac and dc in each pair. The cathode degeneration provides gain stability with tube aging and filament temperature fluctuation, and insures rf gain similarity between units.

3-2.2. The first rf amplifier, a remote cut-off type 6EH7, provides linearity over the full input range. The last stage of amplification is operated at full gain with fixed grid bias in order to maintain a sufficient rf voltage level for linear diode detection. The voltage developed across the cathode resistor of this stage, because of its low impedance characteristic, is used to supply bias for the curve-shaping diodes in the AGC amplifier section.

3-2.3. The output of the negative-going detector is fed to the first section

of the dc amplifier which provides AGC gain to the second dc amplifier stage, along with a low output impedance and phase inversion for the required positivegoing meter and output circuits.

3-2.4. The second section of the dc amplifier was designed as an operational amplifier in order to satisfy the following stringent requirements; stability, phase inversion for the required AGC signal polarity, a low and precise output impedance for driving the AGC line, a high level input signal handling capability, a convenient and accurate gain adjustment, and permissible gain settings above and below unity.

3-2.5. Front panel selection of the various dynamic ranges is provided for by a multisection range switch. The functions of this control are to switch in fixed and variable rf grid bias levels, and to select the appropriate calibration adjustment controls.

3-2.6. The function of the expand circuit is to disable the dynamic action of the AGC voltage, at a particular dc level, under control of the Expand Level adjustment. The diode associated with the arm of the control is normally biased to represent a high impedance, until the AGC voltage level is equal in magnitude to the value at the arm of the control. At this time the diode conducts, representing a low impedance, and sets the value of the AGC line at the dc level of the Expand Control. This permits the rf amplifier, and hence the output display, to be linear during the time the diode is conducting.

SECTION IV

MAINTENANCE

4-1 Scope

4-1.1. This section contains an rf alignment procedure, control circuit adjustment procedures, an electronic parts list, and complete schematic diagrams for Model LA-5100.

4-2 General

4-2.1. Model LA-5100 is designed to give long service with a minimum of maintenance. The required maintenance comprises the replacement of tubes, the necessary touch-up of the rf response of the unit after such replacements, and the occasional re-adjustment of the control circuits.

4-3 RF Alignment Procedure

4-3.1. Test Equipment Recommended

Sweep Generator Jerrold Model 900-A

Variable Attenuator Jerrold Model AV-50-2

Electronic Coaxial Switch Jerrold Model FD-30

Oscilloscope Standard dc

Marker Generator (for markers at 45, 80, and 100 mc)

4-3.2. Step-by-Step Procedure

1. Interconnect equipment with jumper cables. Marker generator output to marker input on 900-A sweep generators, SWEEP OUTPUT of 900-A to unmarked fitting at lower right of FD-30, unused fitting on D-50 detector on 900-A to B fitting in right-hand group of fittings on FD-30 (be sure other fitting on D-50 is terminated), VERT OUT fitting on 900-A to B fitting in left-hand

group of fittings on FD-30, HOR OUT fitting on 900-A to horizontal input of oscilloscope, vertical input of oscilloscope to unmarked fitting at lower left of FD-30, VIDEO OUT fitting of LA-5100 to A fitting in left-hand group of fittings on FD-30 (be sure unused VIDEO OUT fitting on LA-5100 is terminated in 10 k ohms), RF IN fitting on LA-5100 to one fitting on attenuator AV-50-2 (be sure unused RF IN fitting is terminated in 50 ohms), A fitting in right-hand group of fittings on FD-30 to un-used AV-50 fitting.

2. Connect Models LA-5100, 900-A, FD-30, marker generator, and oscilloscope to 117-v ac power source and turn power switch on LA-5100 to POWER ON position.
3. Set VHF-UHF switch on 900-A to VHF position, detector switch to INT position, center frequency to 55 mc, and sweep width to cover 0 to 110 mc.
4. Set AV-50 to provide 33 db attenuation.
5. Set FD-30 to TEST position.
6. Set vertical sensitivity on oscilloscope to 40 mv per cm.
7. Turn power switches on other test equipment to ON position and allow one hour for warm-up.
8. Adjust ALC control on 900-A to permit 200 mv output as observed on scope.
9. Adjust horizontal control on oscilloscope so that entire trace is on scope .
10. Set FD-30 to AUTO position.
11. Set 40-60-80-LIN switch on LA-5100 to LIN position, place meter switch

in off position, place expand switch in off position, and adjust LINEAR GAIN control to provide a convenient size test wave-form: relative to the reference wave-form.

12. Insert markers at 45, 80, and 100 mc as required.

13. Adjust coils on LA-5100 as designated in Figure 1 to obtain the overall response curve shown in Figure 1.

    NOTE: Since there is interaction between these adjustments, it may be necessary to make a series of small adjustments until the best response is achieved.

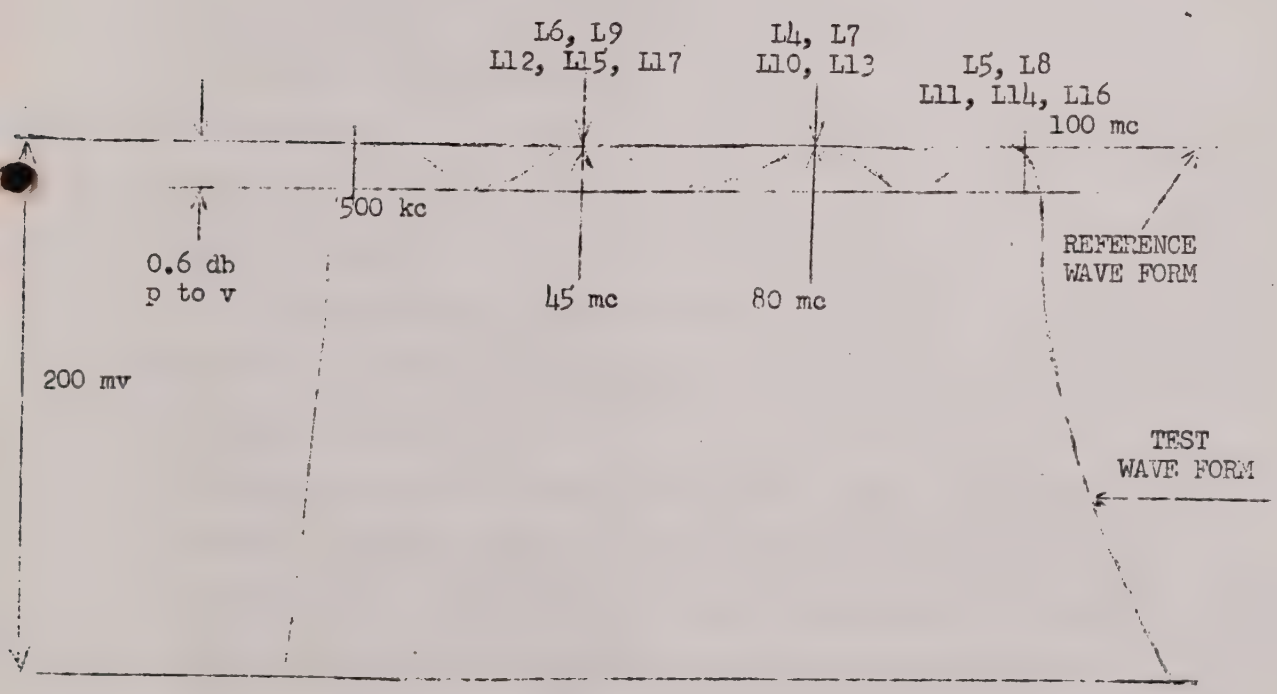

Figure 1: Typical Response of RF Section of LA-5100

14. This completes the rf alignment of the LA-5100. Disconnect all test equipment and LA-5100 is now ready for control circuit adjustments.

4-4 Meter Zero Adjustment

4-4.1. Step-by-Step Procedure

1. Do not connect any test equipment to Model LA-5100 for this test. Plug LA-5100 into 117 v-ac source, turn power switch to POWER ON position, and allow unit to warm up.

   NOTE: It is assumed that rf alignment is correct.

2. Place 40-60-80-LIN switch in LIN position, meter switch in METER ON position, expand switch in off position, and turn LINEAR GAIN control full ccw.

3. Adjust METER ZERO control until meter pointer is on 0 at the left of the upper meter scale.

4-5 Meter Calibration

4-5.1 Test Equipment Necessary

CW Signal Generator

Jerrold Variable Attenuator Model AV-50-2

Calibrated dc voltmeter (0.5% accuracy)

4-5.2 Step-by-Step Procedure

1. Interconnect test equipment. Output of cw signal generator to one fitting of AV-50-2, other fitting of AV-50-2 to RF IN fitting on LA-5100 (be sure other RF IN fitting is terminated in 50 ohms), VIDEO OUT fitting on LA-5100 with calibrated voltmeter across it (be sure other VIDEO OUT fitting is terminated in 10 k ohms).

2. Set cw signal generator to provide 0.5 v rms at 10 mc (approx).

3. Set AV-50-2 for 20 db attenuation.

4. Turn meter switch to METER ON position.

5. Adjust LINEAR GAIN control to provide 1.0 v dc as measured on calibrated voltmeter across VIDEO OUT of LA-5100.

6. Adjust METER CAL control on LA-5100 for full scale on LA-5100 meter.

7. Repeat steps 5 and 6 as required until meter on LA-5100 reads full scale with 1.0 v dc ±0.1% reading on calibrated voltmeter across VIDEO OUT. Then tighten lock nut on METER CAL pot. Disconnect voltmeter from VIDEO OUT fitting.

4-6 Control Adjustments

NOTE: This series of adjustments will be made with test equipment and LA-5100 interconnected as in paragraph 4-5.2 Step 7. It is assumed that rf alignment, meter adjustment and meter calibration are correct.

4-6.1 80 db Range Adjustments

4-6.1.1 Step-by-Step Procedure

1. Place 40-60-80-LIN switch in 80 position.

2. Check that output of cw signal generator is 0.5 v rms at 10 mc (approx.).

3. Provide 70 db attenuation on AV-50-2

4. Adjust 70/80 pot on rear of LA-5100 (80/80 on some units) till meter reads 70 db on 80 db scale.

5. Change attenuation on AV-50-2 to 40 db.

6. Adjust 40/80 pot till meter reads 40 db on 80 db scale.

7. Repeat steps 3, 4, 5, and 6 until both settings are correct.

8. Change attenuation on AV-50-2 to 20 db

9. Adjust 20/80 pot till meter reads 20 db on 80 db scale.

10. Change attenuation on AV-50-2 to 0 db

11. Adjust 0/80 pot till meter reads 0 db on 80 db scale

12. Repeat steps 8, 9, 10, and 11 until both settings are correct.

13. Re-adjust all four controls, as required, until all settings are correct.

14. Provide 80 db of attenuation on AV-50-2 and check to see that meter reads 80 db on 80 db scale.

4-6.2. 60 db Range Adjustment

4-6.2.1. Procedure

The range adjustment for the 60 db range is carried out in the same manner as for the 80 db range except that the 60 db range controls are used with the appropriate AV-50-2 settings to obtain the proper meter readings on the 60 db meter scale.

4-6.3. 40 db Range Adjustment

4-6.3.1 Procedure

The range adjustment for the 40 db range is carried out in the same manner as for the 60 db range except that the 40 db range controls are used with the appropriate AV-50-2 settings to obtain the proper meter readings on the 40 db meter scale.

REPLACEMENT PARTS LIST

SCHEM. DES.	DESCRIPTION	PART NO.
	CAPACITORS	
C-1,48,53,54,57,58,59,67,68, 69,70,71,72,73,74,75	1000 pf Disc.	123-115
C-2,8,16,20,26,29,36,37,45,60	470 pf Ceramic	123-113
C-4,7,15,19,25,34,35,41	220 pf Ceramic	123-119
C-5	68 pf TCZ	121-029
C-6,11,13,18,24,28,33,40,42	.05 mf Tubular 0200v- Astron ML-2-05	125-053
C-9,10,21,22,30,31,38,44,46	.5mfd Tubular 200v- Astron MQCS-2-5	125-045
C-12,17,23,27,32,39,43	62 pf TCZ	121-028
C-14	3000 pf Mica CM-20B-302K	126-070
C-47,49,65,76	1000 pf Feed Thru	129-108
C-50	2200 pf Mica CM-19B-222K	126-024
C-51	330 pf Mica	126-038
C-52	150 pf Mica	126-008
C-55	.01 mfd disc.	124-031
C-56,63	.1 mfd Tubular 200v	125-002
C-61 A-B	40-40 mfd Electrolytic 350v	127-605
C-62A,B,C	40-40-40 mfd Electrolytic 350v- Aerovox Common Pos.	127-608
C-63	50 pf Ceramic	123-122
C-64	.047 mfd Tubular 200v	125-001
	CHOKE	
L-1	RF Choke Coil, 500 uh	157-013

SCHEM. DES.	DESCRIPTION	PART NO.
	FUSE	
F-1	2 amp. 3AG 125v (1A-3AG Slo-Blo-250v, #101-345, for 230v Operation)	101-352
	LAMPS	
I-1,2	G.E. #328	102-004
	METER	
M-1	Meter	B171-210
	RECTIFIERS	
CR1,5	Diode, 1N695	139-150
CR2,3,4	Diode, 1N34	139-100
CR7,8,9	ST CER 72	137-711
	RESISTORS	
R-2,10,11,16,24,30,38,44,50,61,63	10K 1/2w 5%	112-485
R-3	47k 1w 1% - IRC-DCF	115-048
R-4	750 ohm 1/2w 5%	112-347
R-5,20,34,48	240 ohms ½w 5%	112-284
R-6,14,21,27,35,41,49,56	16 ohms ½w 5%	112-137
R-7	2400 ohm 1/2w 1% - IRC-DCC	115-055
R-8,71	237 ohm 1/2w 1% - IRC- DCC	115-113
R-9,23,29,37,43,47,53,68,79, 121,122	1k 1/2w 5%	112-359
R-12,13,25,26,39,40,52,54,55,60, 76,123,124	100 ohm ½w 5%	112-233
R-15,22,28,36,42,51,57,67,70	1k 1/2w 1% - IRC-DCC	115-128
R-17,31,45,48	24 ohm ½w 5%	112-158
R-18,32,46,59	160 ohm ½w 5%	112-263

SCHEM. DES.	DESCRIPTION	PART NO.
R-19	680 ohm 1/2w 5%	112-338
R-33	820 ohm 1/2w 5%	112-350
R-62,130	330 ohm 1/2w 5%	112-296
R-65	19.6k 1/2w 1% - IRC-DCC	115-112
R-66	100 ohm 1/2w 1% - IRC-DCC	115-124
R-69,75	Pot 250 ohm CLU 2511	118-097
R-72,98,106	9090 ohm 1w 1% - IRC-DCC	115-114
R-73	750 ohm 1/2w 1% - IRC-DCC	115-102
R-74,102	14.7k 1/2w 1% - IRC-DCC	115-116
R-77	147 ohm 1/2w 1% - IRC-DCC	115-127
R-78	1.47k, 1/2w 1% - IRC-DCC	115-126
R-80,82	348 ohm 1/2w 1% - IRC-DCC	115-119
R-81,96	26.1k 1w 1% - IRC-DCF	115-133
R-83	34.8k 1w 1% - IRC-DCF	115-130
R-84	6.19 ok 1w 1% - IRC-DCF	115-118
R-85	470 ohm 1w 1% - IRC-DCF	115-135
R-86	Pot 500 ohm CU 5011 w/½ Shaft	118-103
R-87,89,92,128	2.37k 1/2w 1% - IRC-DCC	115-131
R-88,90,91,104,105	Pot 10k CLU 1031	118-026
R-93	Pot 2.5k CLU 2521	118-037
R-94	8250 ohm 1/2w 1% - IRC-DCC	115-125
R-95	Pot 10k CU 1031	118-034
R-97,101,108	Pot 25k CLU 2531	118-027
R-99	Pot 100k CLU 1041	118-022
R-100	7.5k 1/2w 1% - IRC-DCC	115-121

SCHEM. DES.	DESCRIPTION	PART NO.
R-103	Pot 5k CLU 5021	118-023
R-107	Pot 50k CLU 5031	118-024
R-110	100 ohm 10 w - W.W. Type FRL-10 Term. #10L	113-017
R-111	15 ohm 2w 10%	112-133
R-112	220 ohm 2w 10%	112-280
R-113,117	510k 1/2w 5%	112-704
R-114,115,116	2k 10w - W.W. Type FRL-10 Term. #10L	113-007
R-118	330k 1w 1% - IRC-DCF	115-101
R-119	240k 1w 1% - IRC-DCF	115-050
R-120	4.7 ohm 1w 10%	112-103
R-125	82 ohm 5% 1/2w	112-224
R-127	61.9k 1w 1% - IRC-DCF	115-129
R-129	100k 1w 10%	112-615
	SWITCHES	
S-1	Wafer	C161-130
S-2	Toggle-spdt	162-007
S-3	Toggle-spst	162-001
S-4	Toggle-dpdt	162-008
	TRANSFORMER	
T-1	N.T.C. P-386A	C141-188
	TUBES	
V-1	6EH7	131-339
V-2,3,4,5,6,7,8,9	6EJ7	131-340
V-10,11	7308 Amperex	131-603

SCHEM. DES.	DESCRIPTION	PART. NO.
V-12	6DQ6-B	131-350
V-13	6AU6	131-308
V-14	OB2	132-102

SCHEMATIC

LA-5100

R. F. AMPLIFIER

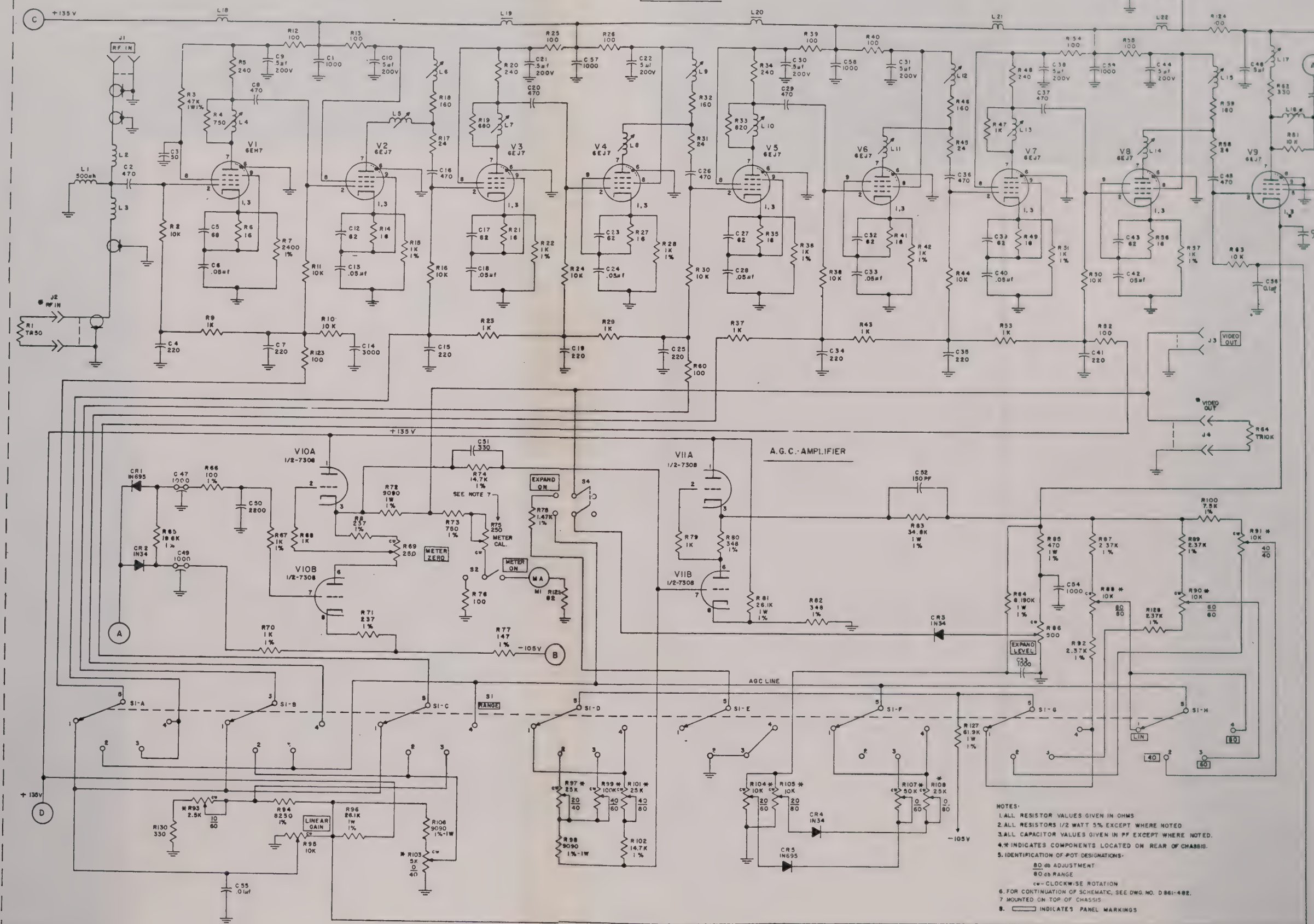

NOTES:

1. ALL RESISTOR VALUES GIVEN IN OHMS
2. ALL RESISTORS 1/2 WATT 5% EXCEPT WHERE NOTED
3. ALL CAPACITOR VALUES GIVEN IN PF EXCEPT WHERE NOTED.
4. * INDICATES COMPONENTS LOCATED ON REAR OF CHASSIS.
5. IDENTIFICATION OF POT DESIGNATIONS:
   - 80 db ADJUSTMENT
   - 80 db RANGE
   - cw - CLOCKWISE ROTATION
6. FOR CONTINUATION OF SCHEMATIC, SEE DWG. NO. D861-482.
7. MOUNTED ON TOP OF CHASSIS
8. ▭ INDICATES PANEL MARKINGS

E861-415-E

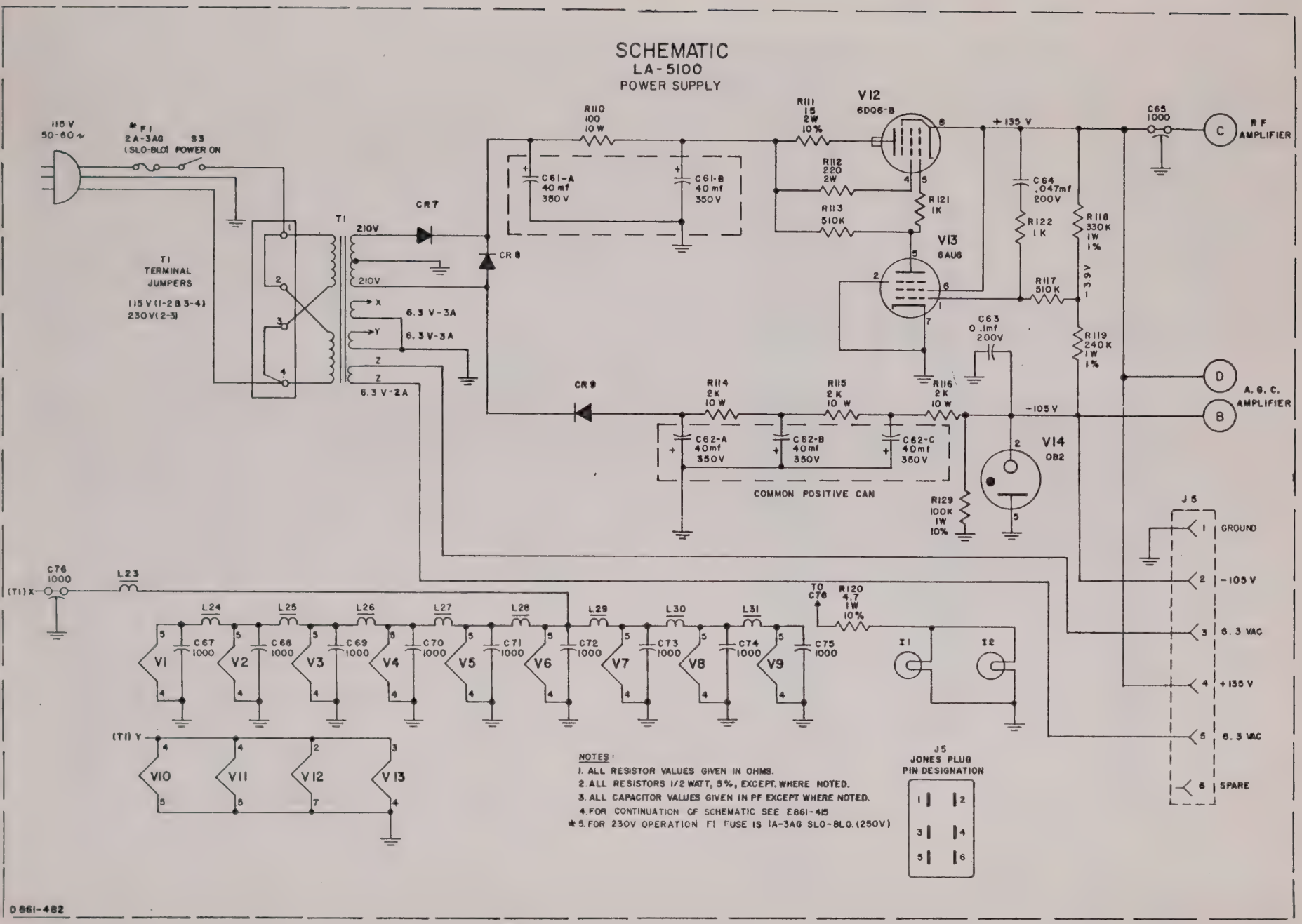
SCHEMATIC
LA-5100
POWER SUPPLY
115 V
50-60 ~
*F1
2A-3AG
(SLO-BLO)
S3
POWER ON
T1
TERMINAL
JUMPERS
115 V (1-2 & 3-4)
230 V (2-3)
T1
210V
210V
CR7
CR8
CR9
6.3 V-3A
6.3 V-3A
6.3 V-2A
R110
100
10 W
C61-A
40 mf
350 V
C61-B
40 mf
350 V
R111
15
2W
10%
R112
220
2W
R113
510K
V12
6DQ6-B
R121
1K
V13
6AU6
+135 V
C64
.047mf
200V
R122
1K
R118
330K
1W
1%
R117
510K
R119
240K
1W
1%
13.9 V
C63
0.1mf
200V
C65
1000
RF
AMPLIFIER
A.G.C.
AMPLIFIER
R114
2K
10 W
R115
2K
10 W
R116
2K
10 W
C62-A
40mf
350V
C62-B
40mf
350V
C62-C
40mf
350V
COMMON POSITIVE CAN
-105 V
V14
OB2
R129
100K
1W
10%
J5
GROUND
-105 V
6.3 VAC
+135 V
6.3 VAC
SPARE
C76
1000
(T1) X
L23
L24
L25
L26
L27
L28
L29
L30
L31
C67
1000
C68
1000
C69
1000
C70
1000
C71
1000
C72
1000
C73
1000
C74
1000
C75
1000
V1
V2
V3
V4
V5
V6
V7
V8
V9
TO C76
R120
4.7
1W
10%
I1
I2
(T1) Y
V10
V11
V12
V13
NOTES:
1. ALL RESISTOR VALUES GIVEN IN OHMS.
2. ALL RESISTORS 1/2 WATT, 5%, EXCEPT WHERE NOTED.
3. ALL CAPACITOR VALUES GIVEN IN PF EXCEPT WHERE NOTED.
4. FOR CONTINUATION OF SCHEMATIC SEE E861-415
*5. FOR 230V OPERATION F1 FUSE IS 1A-3AG SLO-BLO. (250V)
J5
JONES PLUG
PIN DESIGNATION
D861-482

JERROLD

Technical Newsletter

Published by JERROLD ELECTRONICS CORPORATION, Philadelphia, Pa.

INDUSTRIAL PRODUCTS DIVISION

Volume 2, Number 1 Copyright © 1964. Jerrold Electronics Corporation, Philadelphia 32, Pa. March, 1964

COMPARISON TECHNIQUE

IMPROVES SWEEP FREQUENCY MEASUREMENTS*

By K. A. SIMONS, Chief Engineer, Jerrold Electronics Corporation

The Jerrold Electronics Corporation maintains a Design Engineering Laboratory at Hatboro, Pennsylvania. The primary function of this organization is the design of electronic equipment, including wide-band amplifiers, filters and associated equipment in the "awkward" frequency range between 5 and 220 mc. This range is called awkward because the upper end is too high for measuring methods suitable for the low communications frequencies, and the lower end is too high for standing-wave line measurements. A number of measuring techniques, developed to meet this situation, are described in this article.

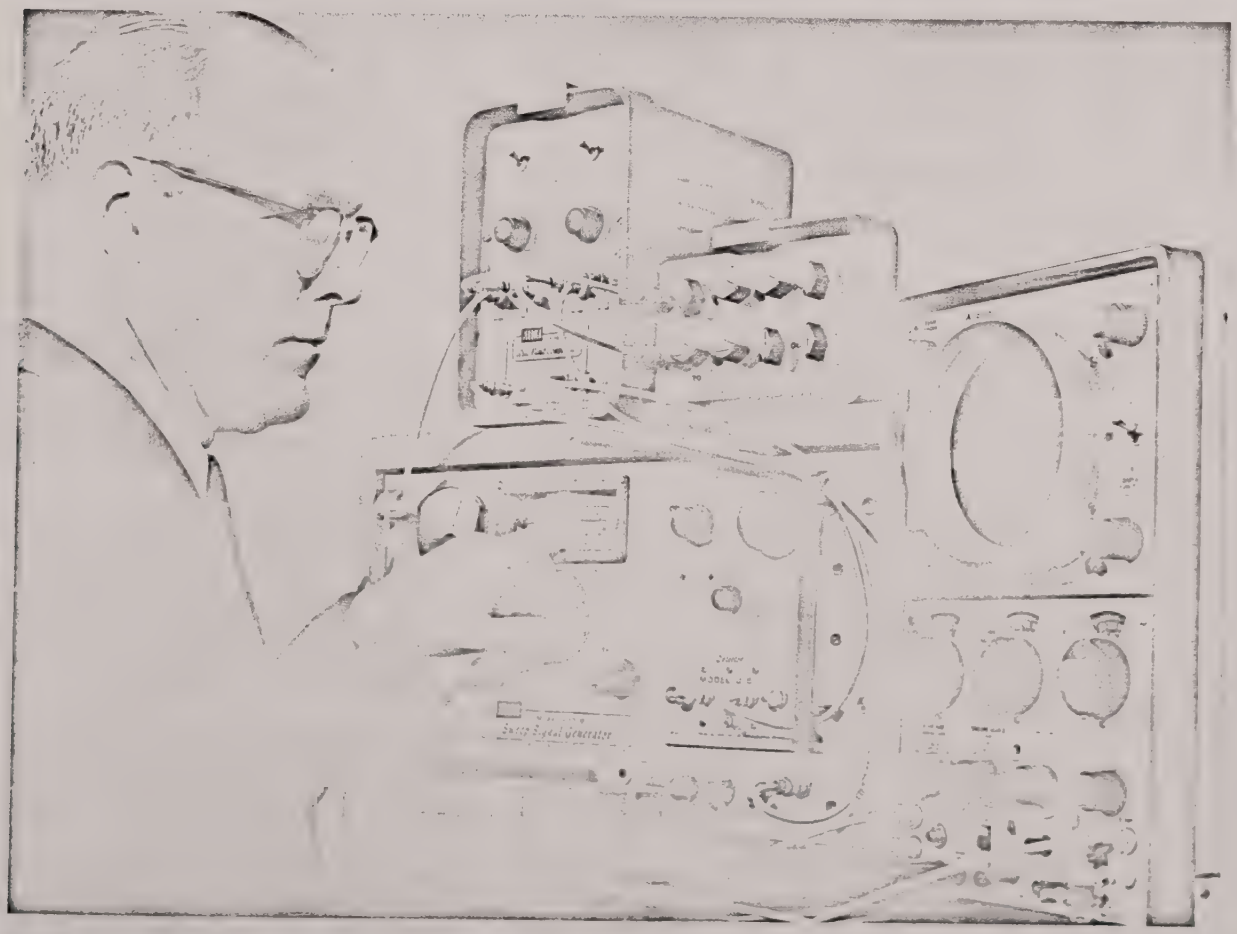

*A major part of this article appeared first under the title "SWEEP MEASUREMENTS MAKING THE TOUGH ONES EASY" in "electronics" Vol. 36, No. 16, April 19, 1963.

BASIC COMPARISON CIRCUIT

The basic technique is to compare transmission through two paths. Figure 1 shows the method used to determine accurately the transmission loss through a network. A test signal source and an output indicator are connected to a DPDT switch so that in one switch position (TEST) the signal is passed through the network the loss of which is to be measured, and in the other switch position (REFERENCE) it is connected through a variable calibrated attenuator.

To make a measurement, the operator throws the switch repeatedly back and forth, while adjusting the attenuator until the output indicator shows identical responses for both switch positions. The loss in the tested network is then equal to that of the attenuator and can be read off from its calibration.

This technique has been used for many years for precise transmission measurements in the telephone art. (See, for example, the article "Transmission Measuring for Manufacture," by George W. Pentico in THE WESTERN ELECTRIC ENGINEER, October, 1961.)

The technique has some of the basic advantages of the more familiar null-bridge measuring method, namely:

1. High source output and a sensitive indicator make very precise settings possible.
2. Other characteristics of the source and indicator have little effect on the accuracy of the result. Neither needs to be calibrated, and the amplitude stability need only be constant long enough for a comparison to be made.
3. Calibration accuracy is entirely determined by a convenient passive attenuator.

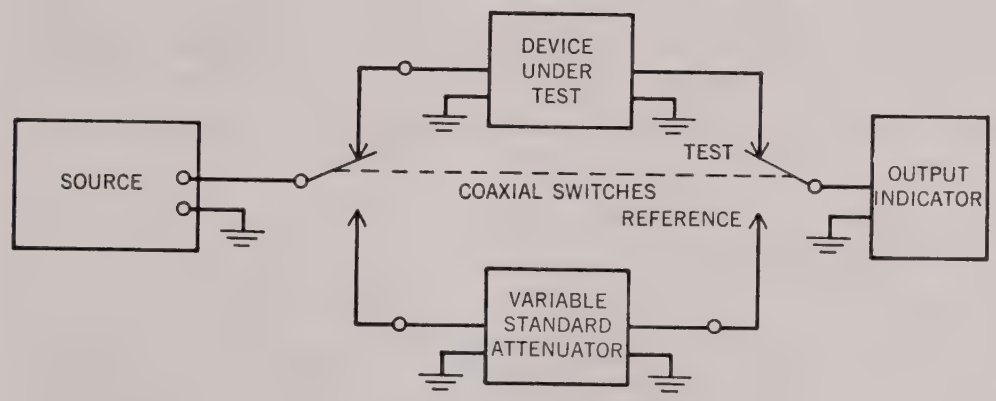

Fig. 1

COMPARISON WITH SWEEP DISPLAY

This approach is a "natural" for sweep frequency testing over wide frequency bands. Sweep frequency generators and oscilloscopes are notoriously as poor on calibration as they are good on sensitivity, while stable and accurate attenuators are common. To adapt to the sweep situation, the basic technique is modified in two respects:

1. High frequency measurements necessarily involve coaxial transmission lines; thus the comparison switch, as part of the transmission system, must be coaxial with an impedance matching that of the associated lines.
2. Oscilloscopic display of a sweep frequency response curve requires periodic repetition of the measurement (usually 60 times per second) so the eye can see a steady pattern. The "switch" must also operate period-

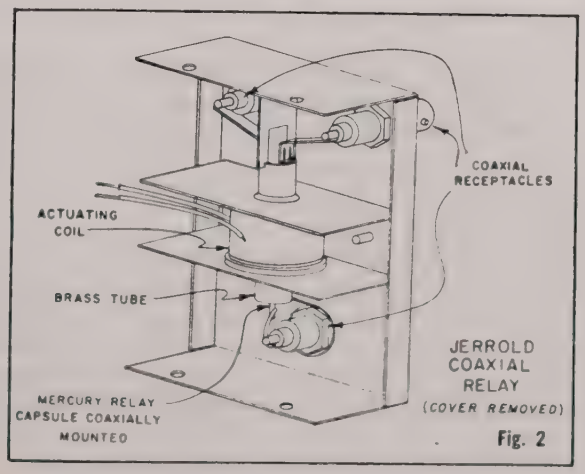

Fig. 2

ically so that the calibration may be seen as part of this stationary pattern. To achieve periodic switch operation, a high speed coaxial relay is used. The construction is illustrated in Figure 2. A Clare mercury-wetted relay capsule is mounted so that it forms a well-matched coaxial structure. This unit operates at high speeds (up to 60 cps) with no bounce and with very long life.

Switches have been in full-time operation in our laboratory for five years with negligible failures.

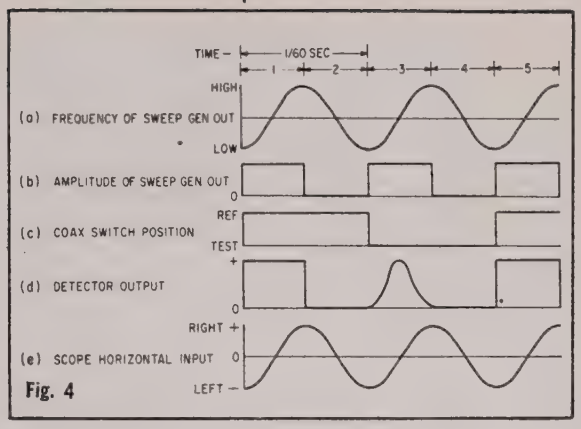

Fig. 4

MEASURING LOSS BY COMPARISON

The test set-up for measuring and displaying the high frequency loss of a network by the sweep-frequency comparison method is diagrammed in Figure 3. The output of a Sweep Frequency Generator, sweeping across the desired band at a 60-cycle rate, is connected to one of two SPDT coaxial switches. The other switch is connected to the input of a wide-band detector. The switches transmit alternately through the network under test and through the variable attenuator.

When this detector output is applied to an oscilloscope's vertical input terminals, and a voltage, with its instantaneous magnitude phased to match the instantaneous frequency of the generator, is applied to the horizontal output terminals, the scope traces out the display illustrated in Figure 4f. (In the example shown, the horizontal deflecting voltage must be a 60-cycle sine-wave phased as shown, to agree with the waveform and phase of the frequency modulation.)

The curve presents the loss as it varies with frequency in the unit under test, together with a base line showing zero response (infinite loss) and the REFERENCE trace showing the loss corresponding to the attenuator setting.

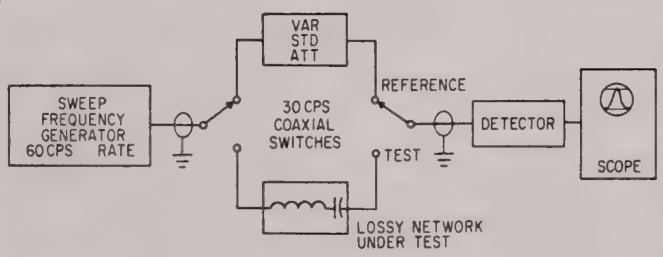

Fig. 3

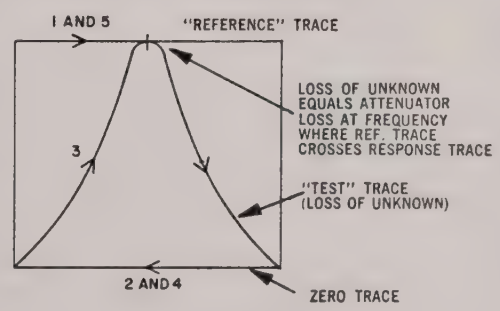

Fig. 4f

Figure 4 illustrates the manner in which the display is generated. The frequency of the sweep output varies sinusoidally between an upper and a lower limit (Figure 4a) at a 60-cycle rate. The output is cut off during the return trace (Figure 4b) to form a zero reference trace. The coaxial switches are transferred at a 30-cycle rate (Figure 4c) allowing the development of a full trace in the REFERENCE position followed by a full trace in the TEST position. As a result, the detector output (Figure 4d) goes through four conditions in each thirtieth of a second; first indicating reference output, second delivering zero output, third following the loss curve of the unit under test and fourth repeating the zero output trace.

The REFERENCE trace crosses the TEST trace at those frequencies where the loss of the unit under test precisely equals the loss of the standard attenuator.

The scope trace photograph in Figure 5 shows the insertion loss measurement of a triple-tuned band-pass filter. The attenuator was set at 1.0 db and the point at which the REFERENCE trace crosses the response shows a loss of 1.0 db at a 7-mc band-width centered on 125 mc. It is a major advantage of this presentation that the accuracy of the measurement is not affected by the constancy of the sweep output across the band, the flatness of the detector, or by drift or other changes in scope gain and centering.

In cases where very small attenuation differences are to be observed, it is convenient to increase the vertical gain and recenter the trace to show a highly expanded view of part of a response pattern. This is illustrated in the series beginning with Figure 6. A Jerrold 900-B sweep frequency generator was set to sweep between zero and 200 mc, and a short coaxial jumper was connected between its output and a detector. The scope vertical gain was increased to about four times that required to show the change from zero to full output, and the centering readjusted to bring the resulting trace onto the screen.

Under this condition the screen showed a change of only 0.2 db per division and the resulting trace (Figure 6) shows the sweep output to be constant within ± 0.2 db. With the same sweep and scope settings, the sweep output was then connected through two coaxial switches (Jerrold Model FD-30) transferring between a short jumper and a variable attenuator (Jerrold Model AV-50) connected through two 2-foot coaxial cables.

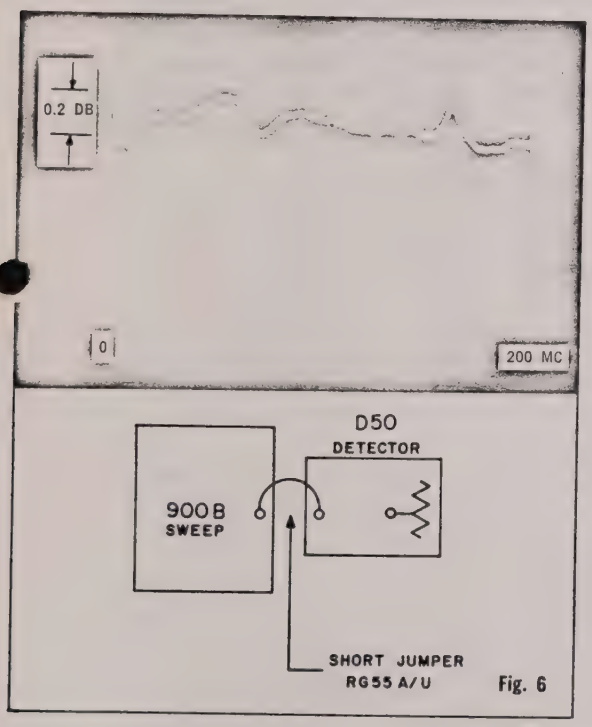

Fig. 6

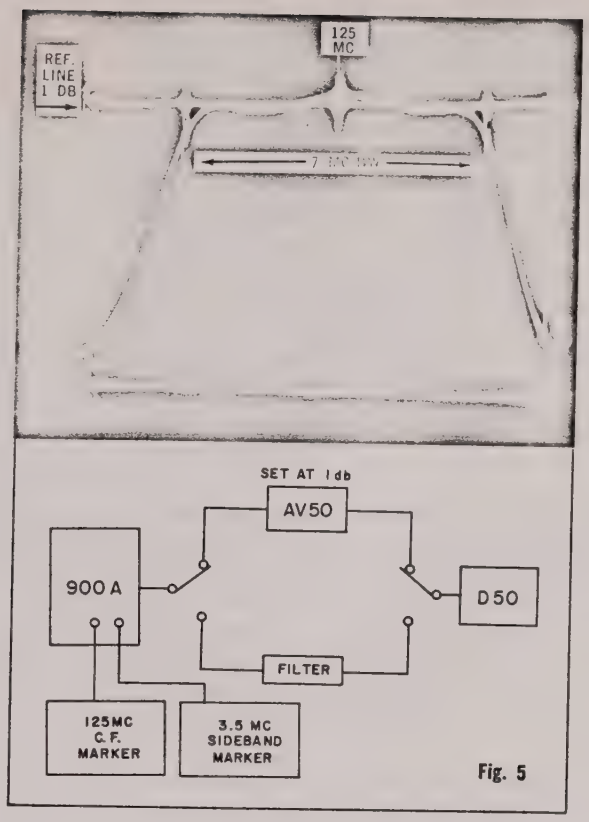

Fig. 5

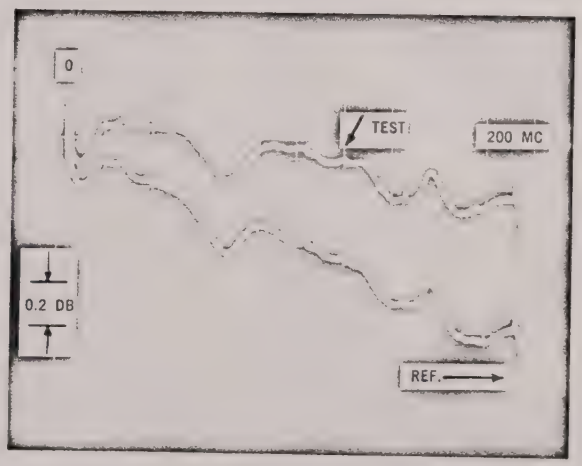

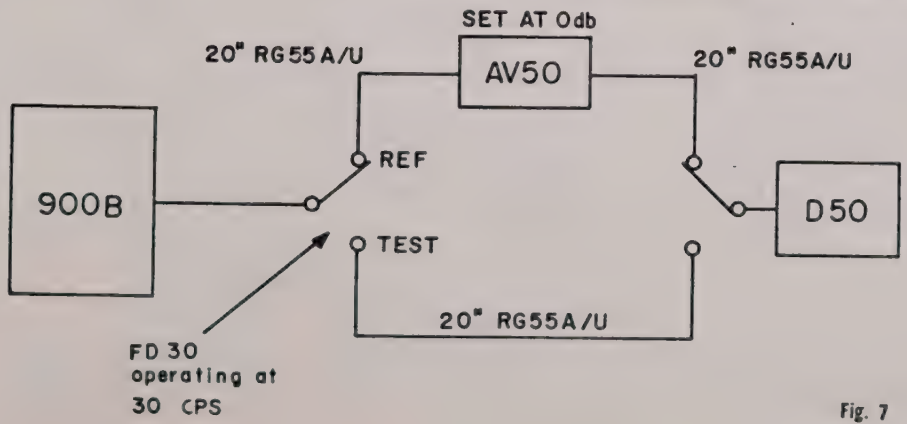

Fig. 7

The resulting photograph (Figure 7) compares the jumper loss with the attenuator insertion loss (at zero setting) continuing with the same expanded vertical scale. By careful inspection it can be seen that the TEST (upper) trace is slightly down at the high end (compared with Figure 6) indicating that the coaxial switches and short jumper have added about 0.2 db loss at 200 mc, while the REFERENCE (lower) trace shows that the attenuator and its longer cables have added about 0.8 db loss at the high end.

If precise measurements are to be made it is **not** essential that either curve be precisely flat, but it **is** essential that the loss on the TEST side, before inserting the unknown, be the same as that on the REFERENCE side. This condition was satisfied by inserting additional cable on the TEST side (totalling 137 inches) so that the insertion losses in both circuits were close to identical. The resulting trace was photographed (Figure 8a) and shows considerably less than 0.05 db difference between the two circuits over the whole frequency range from low frequencies up to 200 mc. Inserting an additional 0.5 db into the standard attenuator gave the result illustrated in Figure 8b, showing that this set-up could be used for loss measurements involving very small attenuation differences.

Figure 9 shows how this approach was applied to a practical measuring problem. We wanted to test a repeater amplifier designed for long cascaded runs in television distribution systems. The amplifier, together with its equalizer, is required to have gain equalizing as closely as possible the loss of 2000 feet of a particular coaxial cable between the frequencies of 5 and 95 mc. To test this, the cable, the equalizers and the amplifier were connected, each following the other on the TEST side of the comparison circuit, with a jumper providing a zero loss reference on the REFERENCE side. The resulting response (illustrated in Figure 9b) shows that the combination of cable plus equalizer plus amplifier had zero loss within about ± 0.25 db between 5 and 95 mc. The fine grained ripple is primarily due to variations in the cable's transmission characteristic.

The usefulness of this technique is obvious, first in the fact that it would take many hours to make this measurement using point-by-point techniques and even then the accuracy would be questionable, and second in the fact that the necessary refined adjustments of the equalizer and amplifier can be carried out quickly and accurately while observing the display, which could not be done with a point-by-point approach.

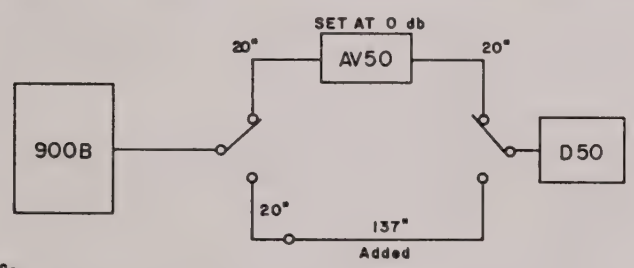

Fig. 8a

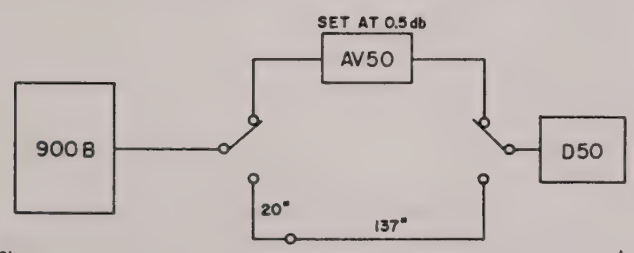

Fig. 8b

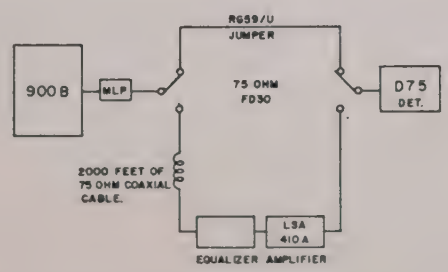

Fig. 9

MEASURING GAIN BY COMPARISON

The comparison technique can be used effectively for the measurement of amplifier gain. The basic circuit is diagrammed in Figure 10. By using a jumper as a zero loss reference and inserting the variable attenuator ahead of the amplifier on the TEST side, the REFERENCE line is made to cross the amplifier response curve at the point where the attenuator loss equals the amplifier gain. The resulting display is illustrated in Figure 11.

The photographs in Figure 12 illustrate gain measurement on an amplifier designed to pass television channel 13 for use in rf distribution systems. Figure 12a illustrates the response curve in the TEST position with a frequency marker at band center (213 mc). Figure 12b illustrates a useful frequency marking technique where a low frequency generator (3 mc) is connected simultaneously with a high frequency one and the resulting side-bands mark the channel edges (213 ± 3 mc). Figure 12c illustrates the trace with the coaxial switch running and the attenuator set at 57 db (0.5 db below the maximum amplifier gain).

To obtain a "blown-up" view of the pass band response, the scope gain was turned up and the trace recentered to give the result shown in Figure 12d. This does show that the amplifier response is within 0.1 db across the band. Neither the measurement, nor the alignment which preceded it, could be readily carried out by any single frequency measurement technique.

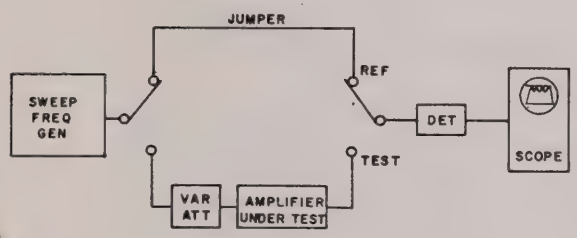

Fig. 10

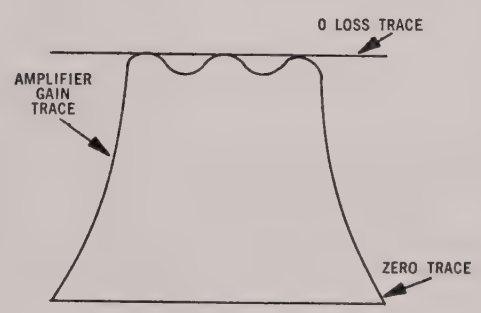

Fig. 11

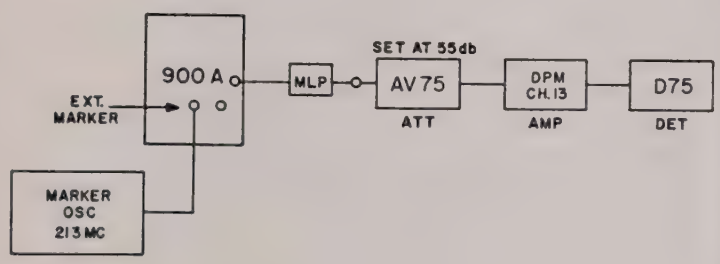

Fig. 12a

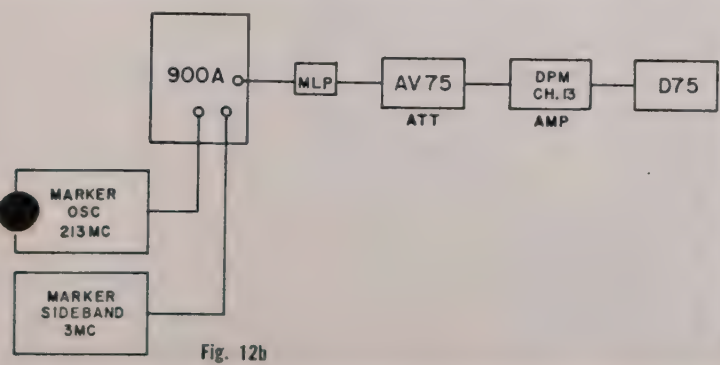

Fig. 12b

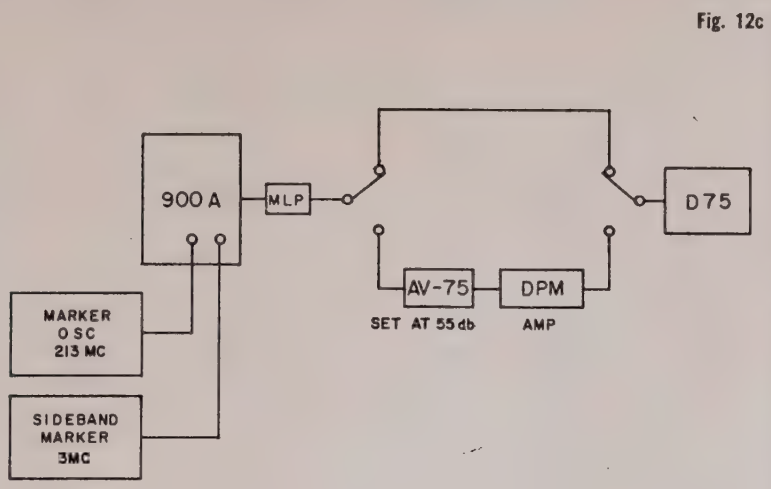

Fig. 12c

Fig. 12d

MEASURING IMPEDANCE MATCH BY COMPARISON

In addition to gain and loss measurements, a third application of the comparison method was found to be very useful in our laboratory. This involves employing a bridge circuit to provide wide-band display of impedance match characteristics. As described more fully in TNL, Vol. 1, No. 4, the technique depends on the characteristics of a high frequency bridge having six equal arms (including the impedance of the source and detector). The bridge circuit is diagrammed in Figure 13 and its effect is summarized by the fact that the insertion loss between the input and output terminals is equal to 12 db plus the return loss of that which is connected to the unknown terminal (return loss is the ratio of the reflected wave in a coaxial system to the incident wave, expressed in db). Stating this another way: when a signal is introduced into the input terminal of the bridge, the output signal is the reflected wave from the unknown diminished by 12 db.

Thus the bridge makes possible impedance measurements over a wide frequency band, converting impedance variations into loss variations which are then accurately measured by the comparison technique. It is, in effect, a directional coupler giving flat response over a very wide band of frequencies in the "awkward" 5 to 200 mc range. The equipment set-up for impedance sweeping is diagrammed in Figure 14. The bridge is connected to the TEST terminals of the comparison switches and a fixed 12 db attenuator is connected with the standard attenuator in the REFERENCE leg. To obtain adequate gain for the measurement of small reflections, a wide-band distributed amplifier is connected ahead of the detector. The display obtained is shown in Figure 14b, the REFERENCE trace crossing the unknown at a return loss level corresponding to the attenuator setting. The bridge we are now using allows measurement of return loss in the range 0 to 40 db, with an accuracy within ± 1 db.

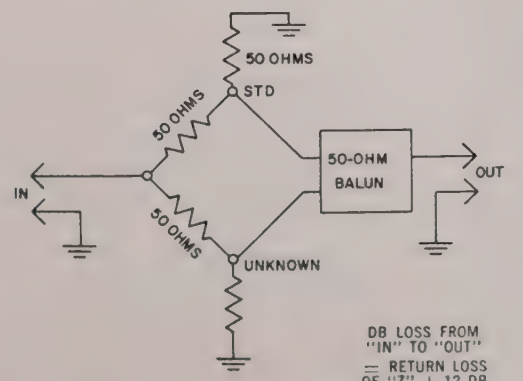

Fig. 13

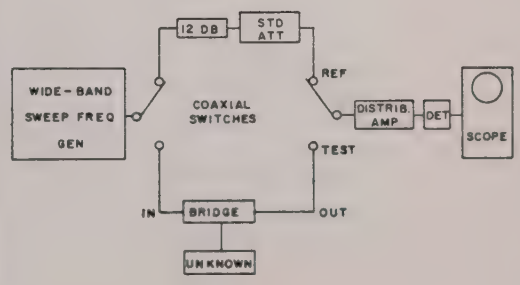

Fig. 14a

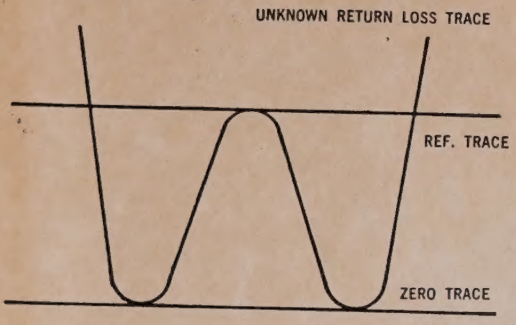

Fig. 14b

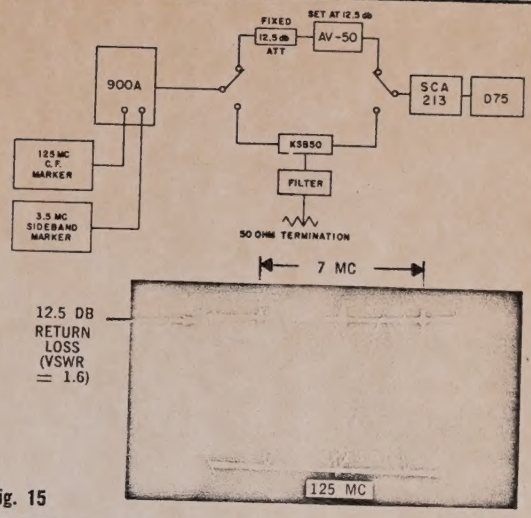

Fig. 15

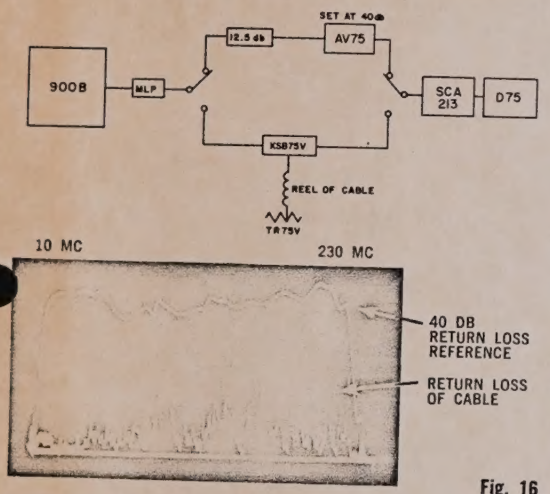

Fig. 16

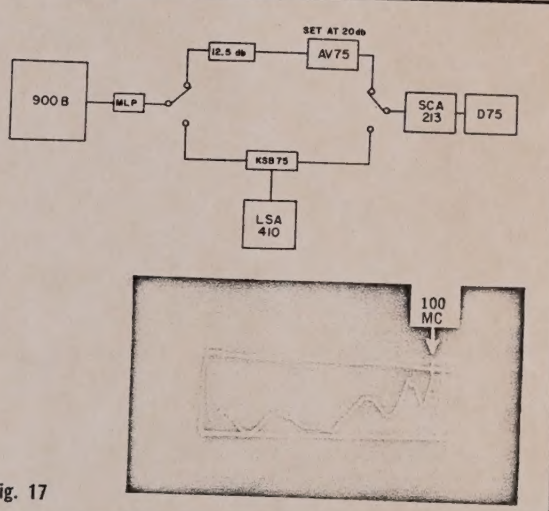

Fig. 17

Figure 15 illustrates measurement of the input impedance of the band-pass filter the insertion loss of which is shown in Figure 5. The filter was aligned for maximum return loss of 12.5 db (max. VSWR of 1.6:1) with Chebishev (equal ripple) match characteristics. Adjustment and measurement were carried out rapidly with the aid of the comparison presentation.

Figure 16 illustrates measurement of the "structural return loss" (the impedance variations due to minor mechanical irregularities) in a 1000-ft. piece of unusually good coaxial cable. The maximum reflection spike at about 150 mc had a return loss level just over 40 db.

Measurement of such a complex characteristic over this frequency range would be a maddening (if not impossible) process by any point-by-point technique.

Figure 17 illustrates the impedance match at the output terminal of the amplifier the response of which was shown in Figure 9. Without the rapid and accurate measurement of match made possible by the return loss bridge, production alignment of this amplifier to meet the required overall performance would be impossible.

CONCLUSION

The comparison technique has been described as it is used at the Jerrold Laboratory for measurement of loss, gain, and impedance match, simultaneously with sweep frequency display of these characteristics. This technique has been found absolutely indispensable in the speed and convenience it contributes to the design and adjustment of a variety of devices in the "awkward" frequency range between 5 and 220 mc.

NOTE — Additional copies of this paper and engineering assistance on the application of Measurements By Comparison may be obtained by contacting the Industrial Products Division, Jerrold Electronics Corporation, 15th & Lehigh, Phila. 32, Pa. Phone: BAldwin 6-3456 — Ext. 215.
EDITORIAL STAFF: MANAGING EDITOR - C. C. Cooley, Jr. TECHNICAL COPY EDITOR - G. Rath
Export: Rocke International, New York 16, N.Y. Cable ARLAB
Canada: Jerrold Electronics (Canada) Ltd., Toronto, Canada

Printed in U.S.A.

DUO-TANG
1258
MADE IN U.S.A.